Edsal Sandusky Corporation

# 40" conventional stand /50" flat panel stand

**MODEL NUMBERS**

**IF3040324409**
**/IP3040324409**

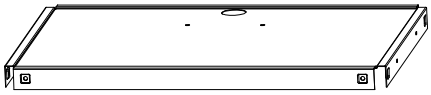

(A)Top Shelf

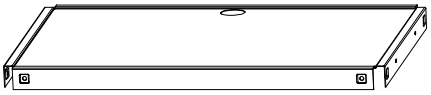

(B)Middle Shelf

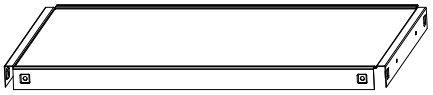

(C)Bottom Shelf

(D)Left Front Leg

(E)Right Front Leg

(F)Rear Legs

(G) Velcro Strap

(H)Plastic Mat

(I) Hex Head Screw

(J)Safety Belt

(K) Square Head Bolt

(L)Serrated Nut

(M) Open End/ Box Wrench

(N)Plastic Grommet

(O) 5" Caster w/o Brake-Rigid

(P) 5" Caster W/Brake

**Part List & Product Specification**

| Reference | Description | Part Number | QTY. | Dimensions |
|---|---|---|---|---|
| A | Top Shelf | AVCBU011 | 1 | AVCBU011 |
| B | Middle Shelf | AVCBU012 | 1 | AVCBU012 |
| C | Bottom Shelf | AVCBU013 | 1 | AVCBU013 |
| D | Left Front Leg | AVLZU013 | 1 | AVLZU013 |
| E | Right Front Leg | AVLZU014 | 1 | AVLZU014 |
| F | Rear Legs | AVLZU015 | 2 | AVLZU015 |
| G | Velcro Strap | ASLAVC01 | 3 | ASLAVC01 |
| H | Plastic Mat | ASLAVC13 | 1 | ASLAVC13 |
| I | Hex Head Screw | ALSG0816 | 12 | 5/16"-18 x 5/8" |
| J | Safety Belt | AJSD0545 | 1 | AVLZU013 |
| K | Square Head Bolt | ALSG0801 | 24 | 5/8" |
| L | Serrated Nut | ALMG0801 | 24 | 5/16 -18" |
| M | Open End/ Box Wrench | AJSD5864 | 1 | ASLAVC01 |
| N | Plastic Grommet | ASLAVC04 | 2 | ASLAVC13 |
| O | 5" Caster w/o Brake-Rigid | ALZSM502 | 2 | ASLAVC01 |
| P | 5" Caster W/Brake | ALZST502 | 2 | ASLAVC13 |

Final Assembly

**Required Tools**

-Hex Wrench-Flat
-13mm Open End/Box Wrench
-Rubber Mallet

Should you have any comments, damage, missing parts, or problems with assembly of this unit please feel free to contact our Edsal manufacturing facility at, (773) 475-3000 and request customer service. We can also be reached on the internet at the following email address:customerservice@edsal.com
To obtain replacement parts, please provide the following information:
-Model# -part# & Description -Location Purchased -Date Purchased

For model **IP3040324409** please see instruction of **FPK 50** to install Flat Panel Kit.

## Step 1

Lay the rear legs (AVLZU015, the straight ones) on a carpeted surface with brackets facing in and up as shown in **Figure 1**. NOTE: Each leg has a "Part No." sticker label above the bracket to represent the top of the leg.

Slide each shelf onto the legs so that the bracket is inside the shelf as shown in **Figure 2**.

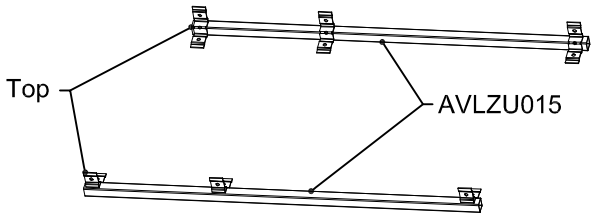


**FIGURE 1**

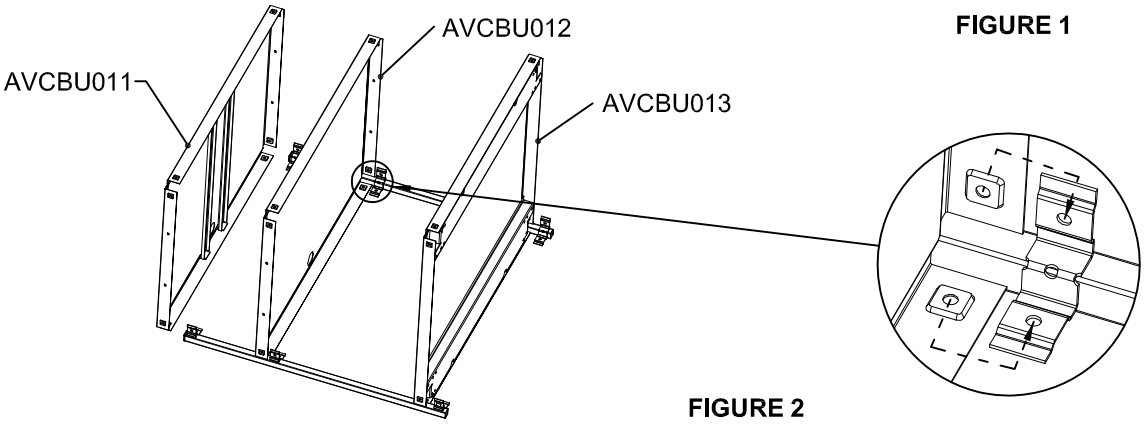


**FIGURE 2**

## Step 2

Slide the 2 front legs (AVLZU013 & AVLZU014) onto the shelves so that the brackets are inside the shelves.

Secure each corner of the shelves and legs together with two bolts (ALSG0801) and two nuts (ALMG0801) using the flat hex wrench as shown in **Figure 3**.

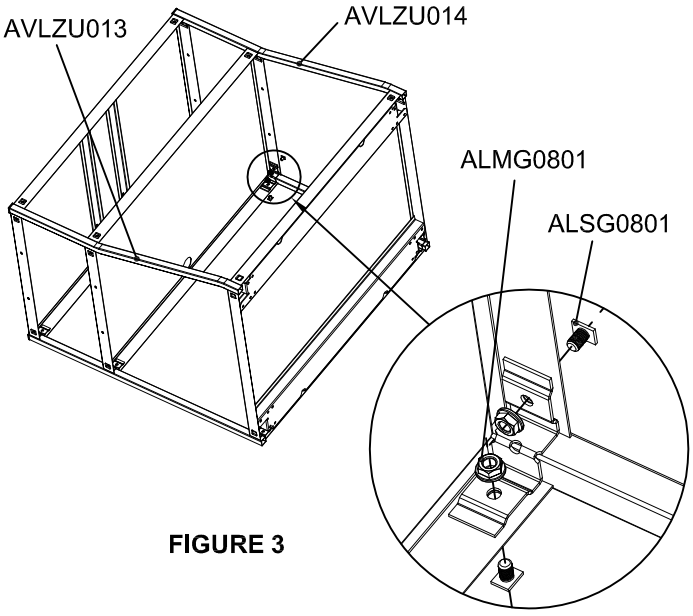


**FIGURE 3**

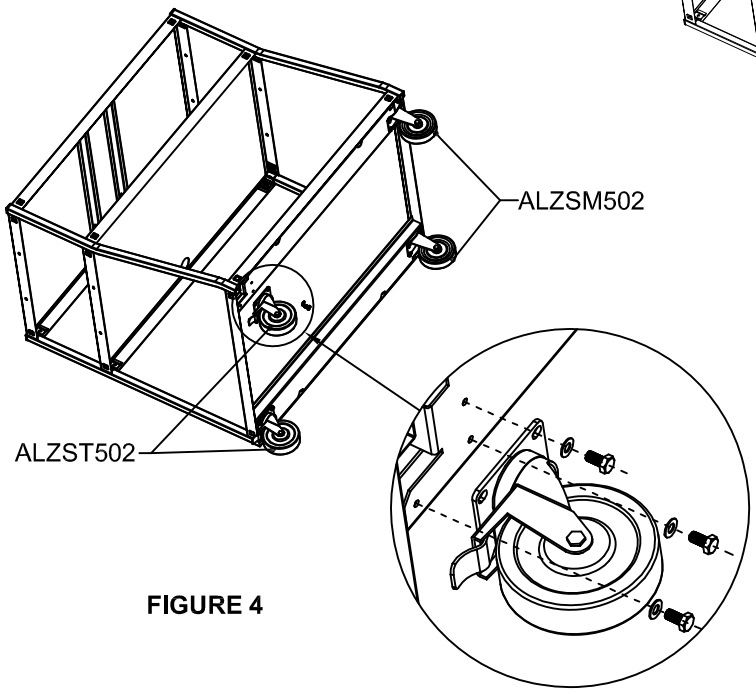


**FIGURE 4**

## Step 3

Attach each caster to the bottom shelf stiffener with three bolts (ALSG0816) and washers using a 13mm open end/box wrench (AJSD5864) as shown in **Figure 4**.

Make sure the casters with brakes are positioned at one end (side) of the cart and the fixed at the other end (side).

## Step 4

Insert the plastic grommet (ASLAVC04) into the hole of top shelf and middle shelf as shown in **FIGURE 5**.

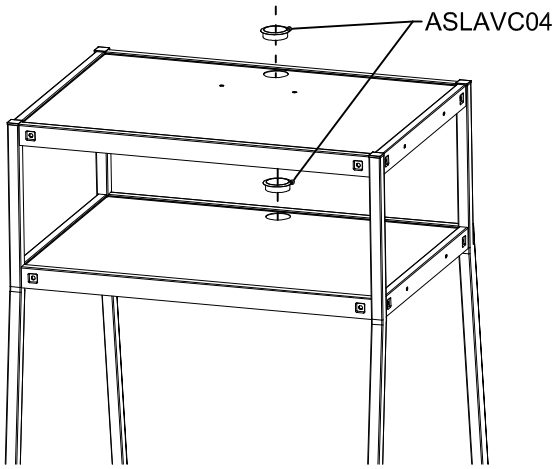


**FIGURE 5**

## Step 5

Place the plastic mat (ASLAVC13) onto the top shelf with the slot in the mat aligned over the grommet hole in the shelf as shown in **FIGURE 6**.

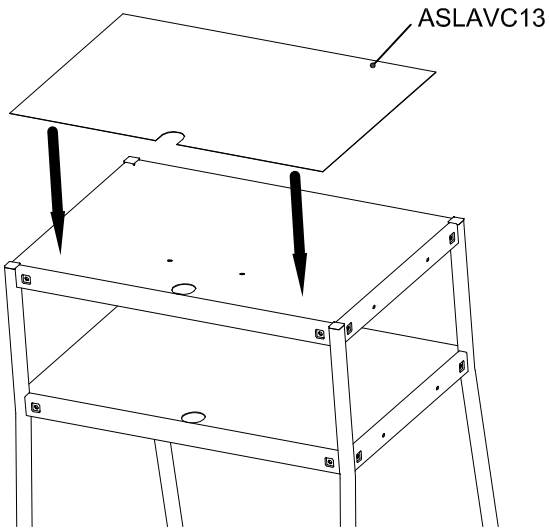


**FIGURE 6**

## Step 6

Lock all brakes prior to monitor installation. Carefully raise the monitor and place it onto the cart as shown in **FIGURE 7**. Position the monitor at equal distances from side to side and from front to rear.

***SAFETY WARNING***

**Note: TWO PERSON ASSEMBLY REQUIRED**

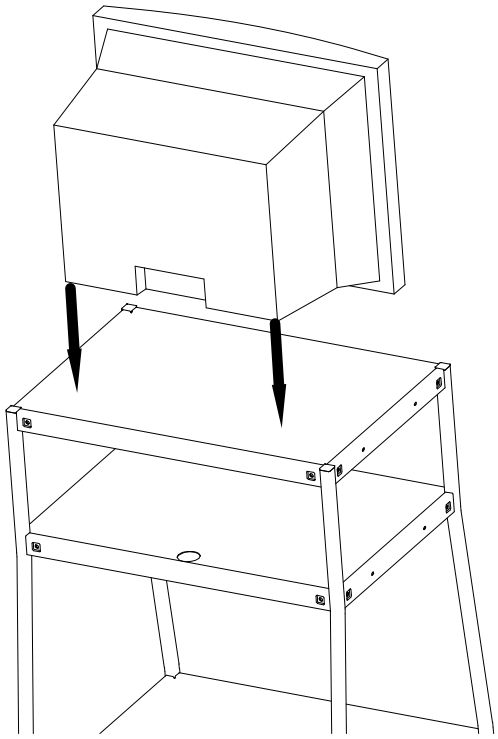

**FIGURE 7**

## Step 7

The pictures below are used for safety belt (AJSD0545) location. To attach safety belt consult the instructions that are provided with the safety belt.

**Unlock the brakes to position your cart assembly**

**Notes: use the Velcro strap for cable management.**

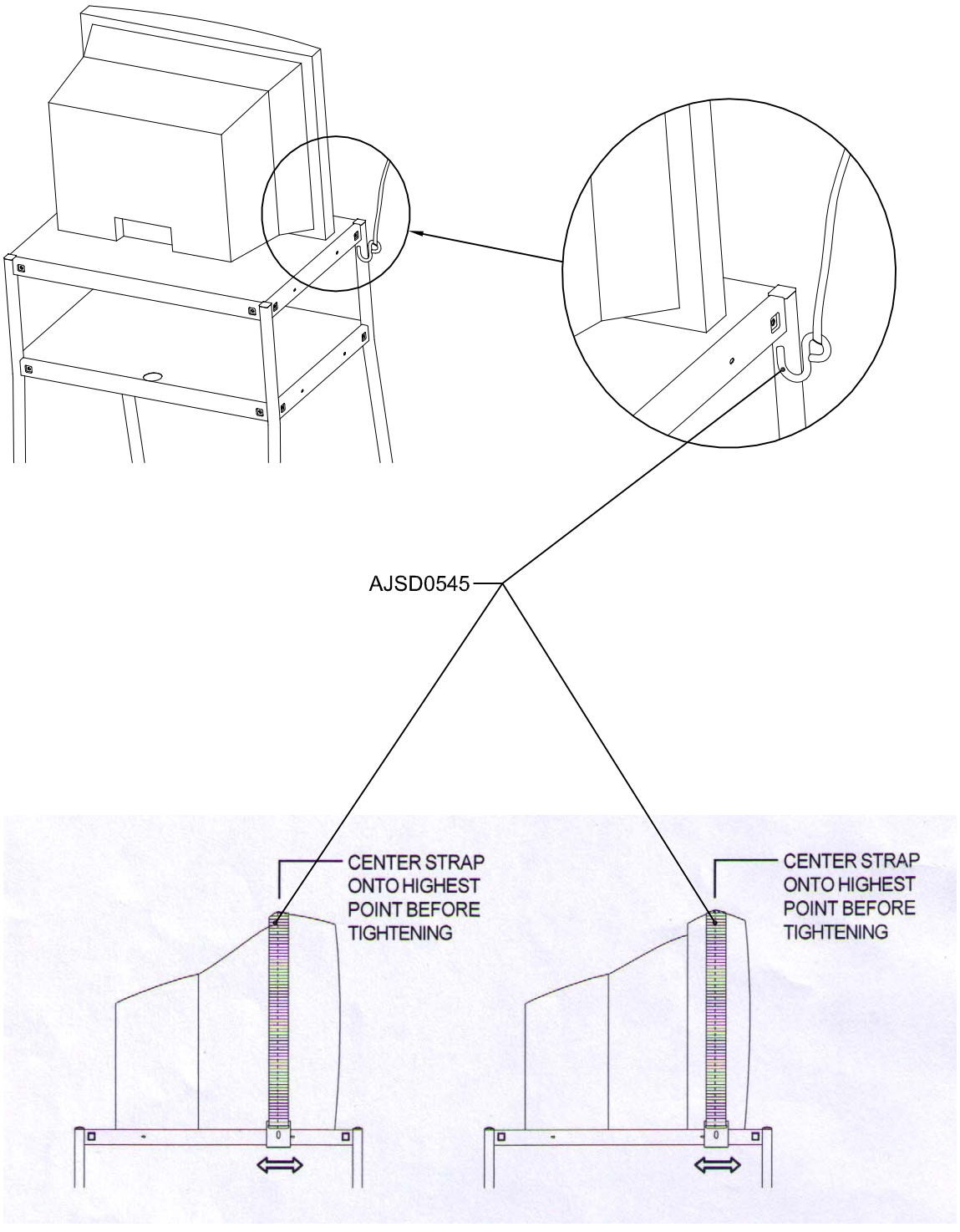


**FIGURE 8**

Edsal Sandusky Corporation

# 27" conventional stand /35" flat panel stand

**MODEL NUMBERS**

**IF3032274409**
**/IP3032274409**

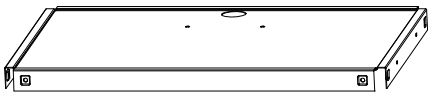

(AA)Top Shelf

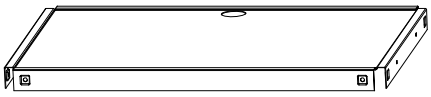

(BB)Middle Shelf

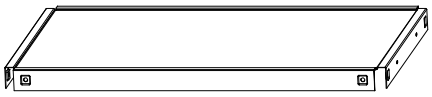

(CC)Bottom Shelf

(DD)Left Front & Right Rear Legs

(EE)Right Front & Left Rear Legs

(FF) 4" Caster w/o Brake-Rigid

(GG) 4" Caster w/Brake

(HH)Plastic grommet

(II)Plastic Mat

(JJ)Safety Belt

(KK)Square Head Bolt

(LL)Serrated Nut

(MM) Open End/ Box Wrench

(NN) Velcro Strap

(00)Hex Head Screw

| Part List & Product Specification | | |
|---|---|---|
| **Reference** | **Description** | **QTY.** |
| AA | Top Shelf | 1 |
| BB | Middle Shelf | 1 |
| CC | Bottom Shelf | 1 |
| DD | Left Front & Right Rear Legs | 2 |
| EE | Right Front & Left Rear Legs | 2 |
| FF | 4" Caster w/o Brake-Rigid | 2 |
| GG | 4" Caster w/Brake | 2 |
| HH | Plastic Grommet | 2 |
| II | Plastic Mat | 1 |
| JJ | Safety Belt | 1 |
| KK | Square Head Bolt | 24 |
| LL | Serrated Nut | 24 |
| MM | Open End/ Box Wrench | 1 |
| NN | Velcro Strap | 3 |
| OO | Hex Head Screw | 12 |

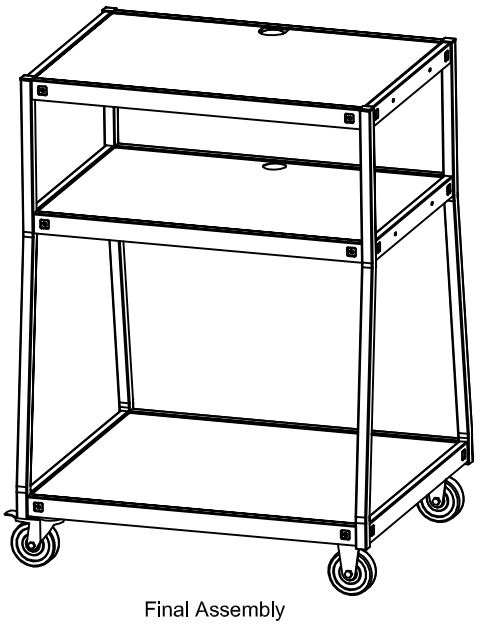

Final Assembly

| Required Tools |
|---|
| -Hex Wrench-Flat<br>-13mm Open End/Box Wrench<br>-Rubber Mallet |

Should you have any comments, damage, missing parts, or problems with assembly of this unit please feel free to contact our Edsal manufacturing facility at, (773) 475-3000 and request customer service. We can also be reached on the internet at the following email address:customerservice@edsal.com
To obtain replacement parts, please provide the following information:
-Model# -part# & Description -Location Purchased -Date Purchased

For model **IP3032274409** please see instruction of **FPK 35** to install Flat Panel Kit.

## Step 1

Lay the front legs (DD & EE) on a carpeted surface with brackets facing in and up as shown in **Figure 1**. NOTE: Each leg has a "Part No." sticker label above the bracket to represent the top of the leg.

Slide each shelf onto the legs so that the bracket is inside the shelf as shown in **Figure 2**.

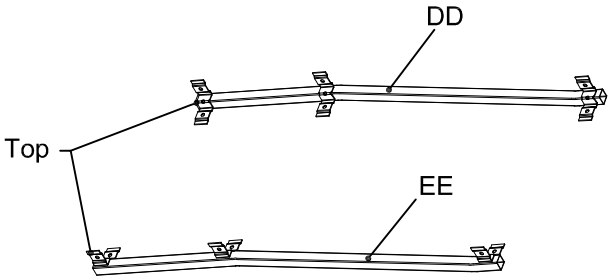


**FIGURE 1**

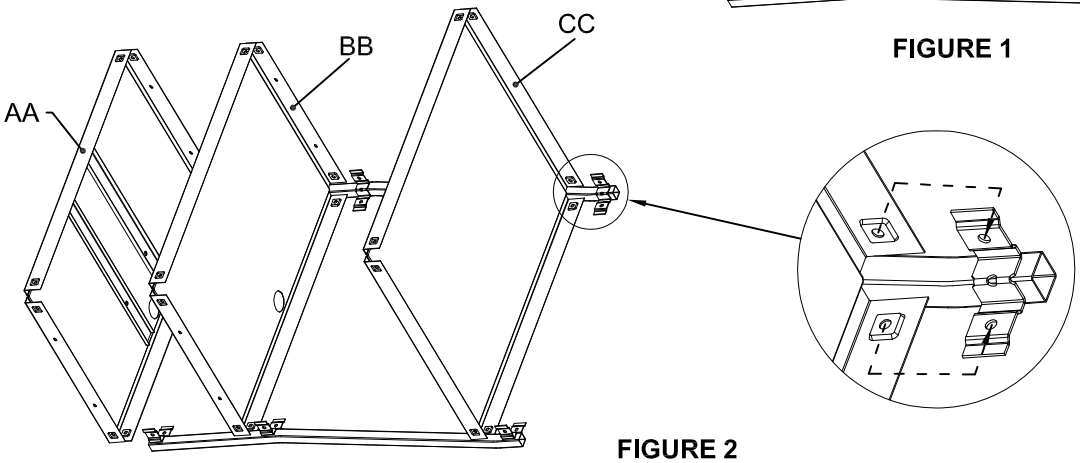


**FIGURE 2**

## Step 2

Slide the 2 remaining legs (DD & EE) onto the shelves so that the brackets are inside the shelves.

Secure each corner of the shelves and legs together with two bolts (KK) and two nuts (LL) using the flat hex wrench as shown in **Figure 3**.

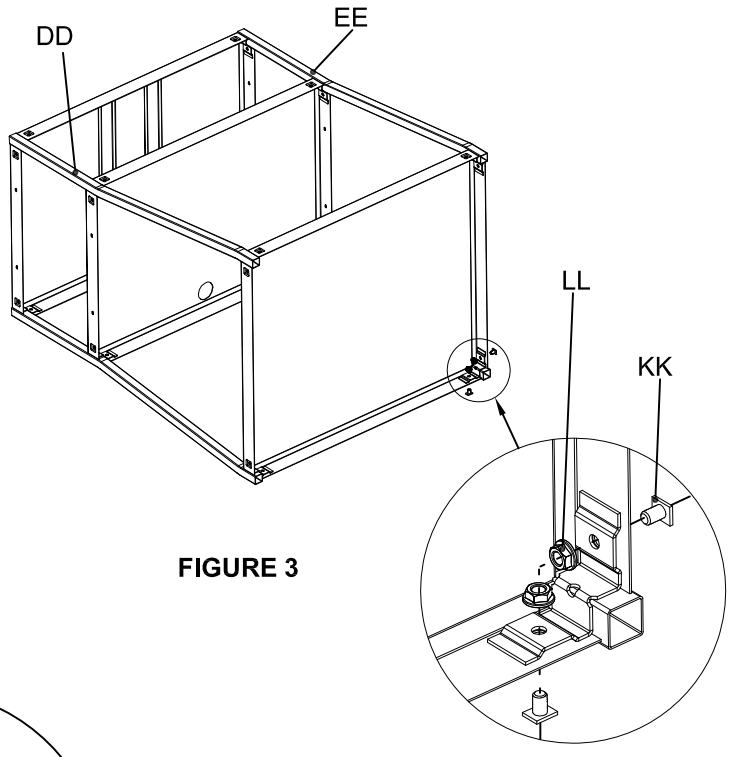


**FIGURE 3**

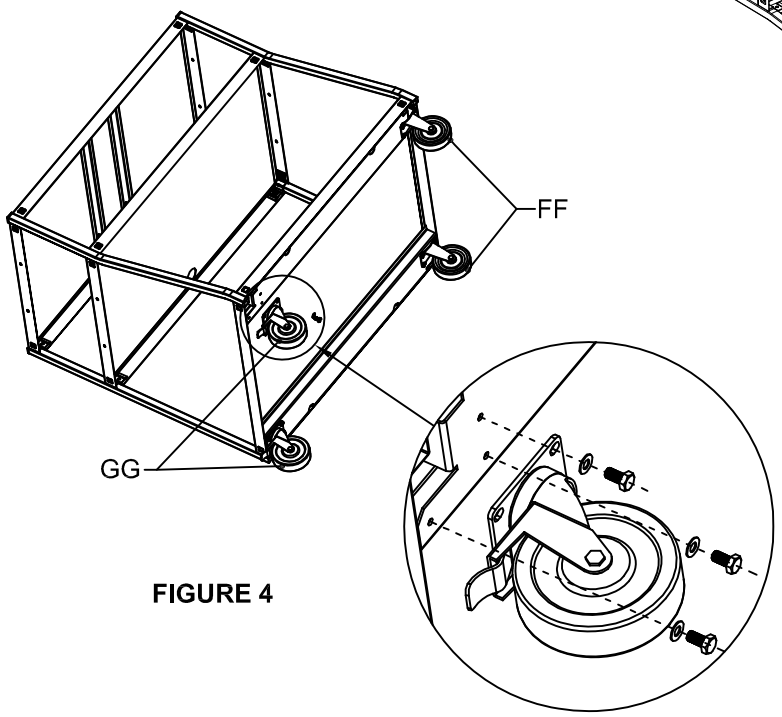


**FIGURE 4**

## Step 3

Attach each caster to the bottom shelf stiffener with three bolts (OO) and washers using a 13mm open end/box wrench (MM) as shown in **Figure 4**.

Make sure the casters with brakes are positioned at one end (side) of the cart and the fixed at the other end (side).

## Step 4

Insert the plastic grommet (HH) into the hole of top shelf and middle shelf as shown in **FIGURE 5**.

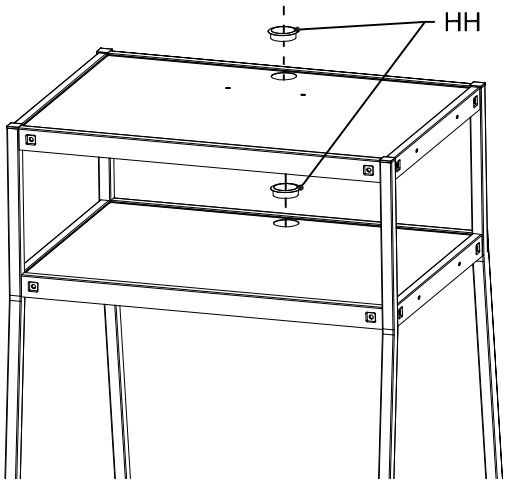


**FIGURE 5**

## Step 5

Place the plastic mat (II) onto the top shelf with the slot in the mat aligned over the grommet hole in the shelf as shown in **FIGURE 6**.

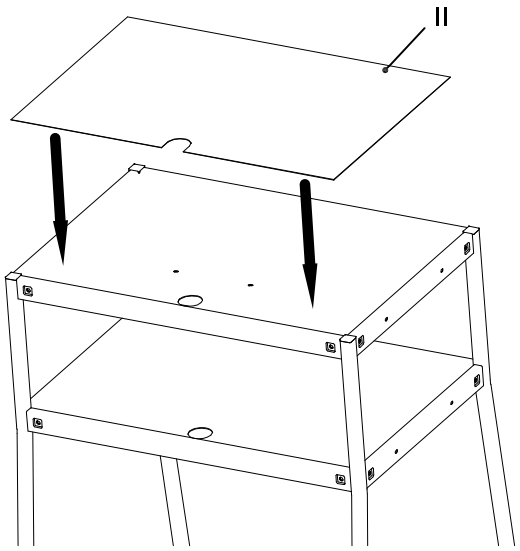


**FIGURE 6**

## Step 6

Lock all brakes prior to monitor installation. Carefully raise the monitor and place it onto the cart as shown in **FIGURE 7**. Position the monitor at equal distances from side to side and from front to rear.

***SAFETY WARNING***

**Note: TWO PERSON ASSEMBLY REQUIRED**

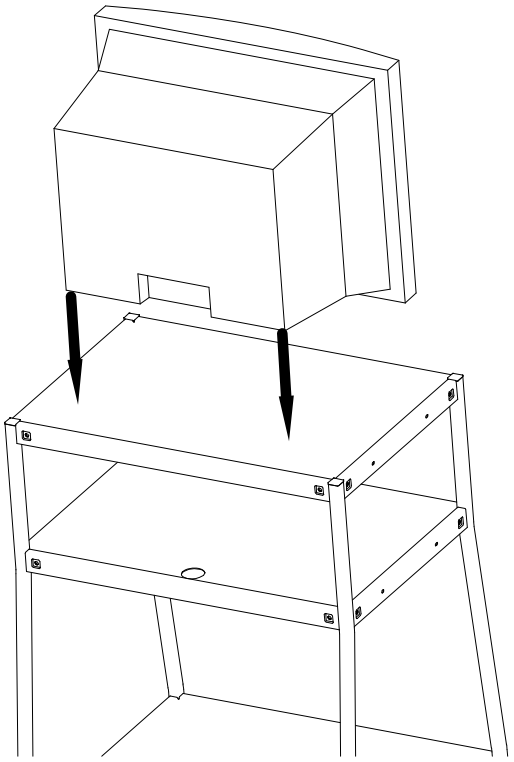

**FIGURE 7**

## Step 7

The pictures below are used for safety belt ( JJ) location. To attach safety belt consult the instructions that are provided with the safety belt.

**Unlock the brakes to position your cart assembly**

**Notes: use the Velcro strap for cable management.**

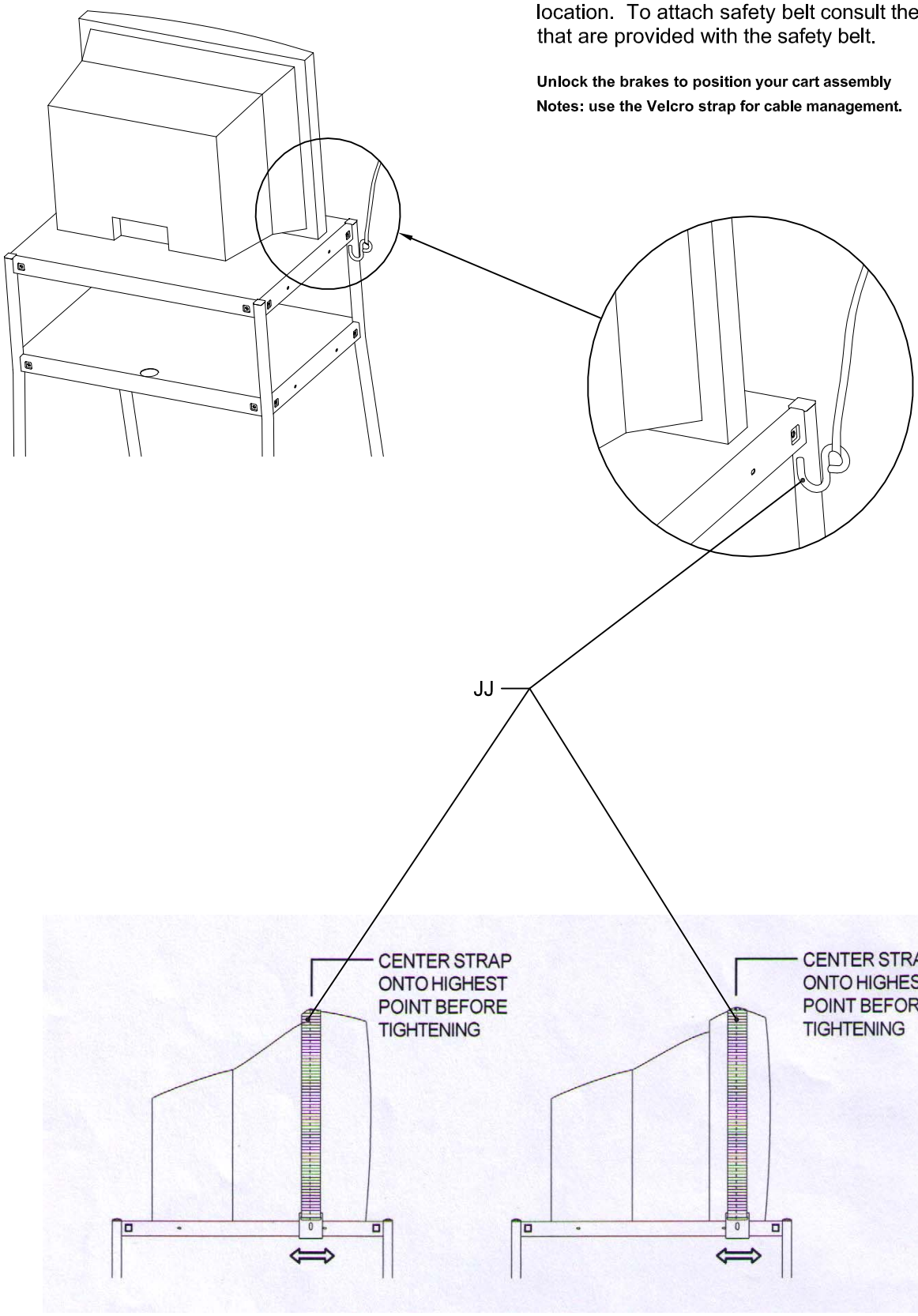


**FIGURE 8**

# ASSEMBLY INSTRUCTIONS

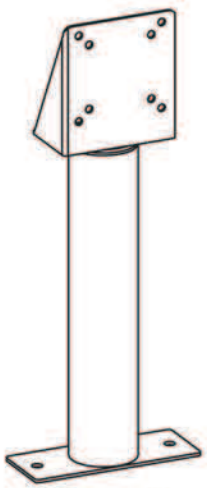

A : (1pc)

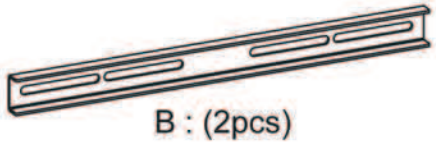

B : (2pcs)

C : (2pcs)

D : (8pcs)

E : (14pcs)

F : (8pcs)

G : (4pcs)

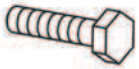

H : (2pcs)

I : (2pcs)

J : (1pc)

K : (1pc)

L : (1pc)

M:(4pcs x 2type)

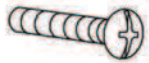

N: (4pcs x 3type)

1.

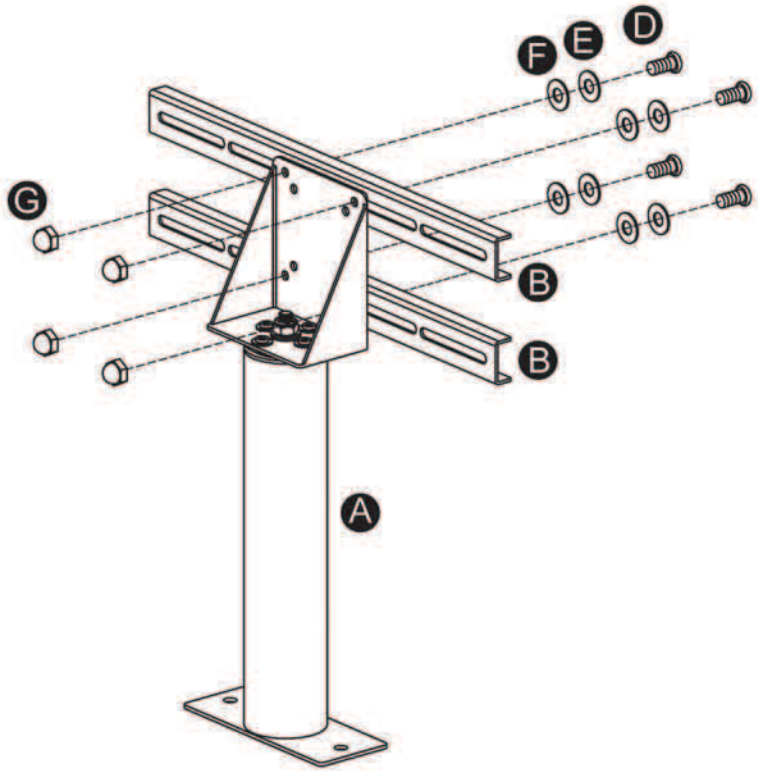

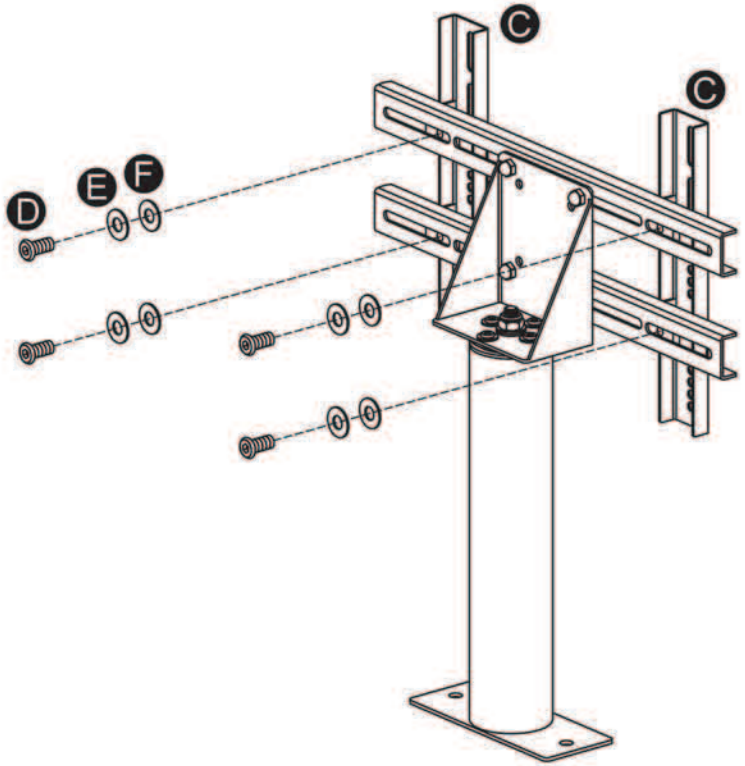
2.